Regular File Management in Linux

Outile

- Creating Regular Files
- Editing Regular Files
- Viewing Regular Files
- More commands on Regular Files

Creating Regular Files

- In Linux, in order to create a new regular file, we can use:
- The « touch » command,
- One of the editors: vi, vim, nano, gedit, …

Editing Files with Vim

- Vim is an improved version of the vi editor distributed with Linux and UNIX systems.
- It has the following operating Mode:

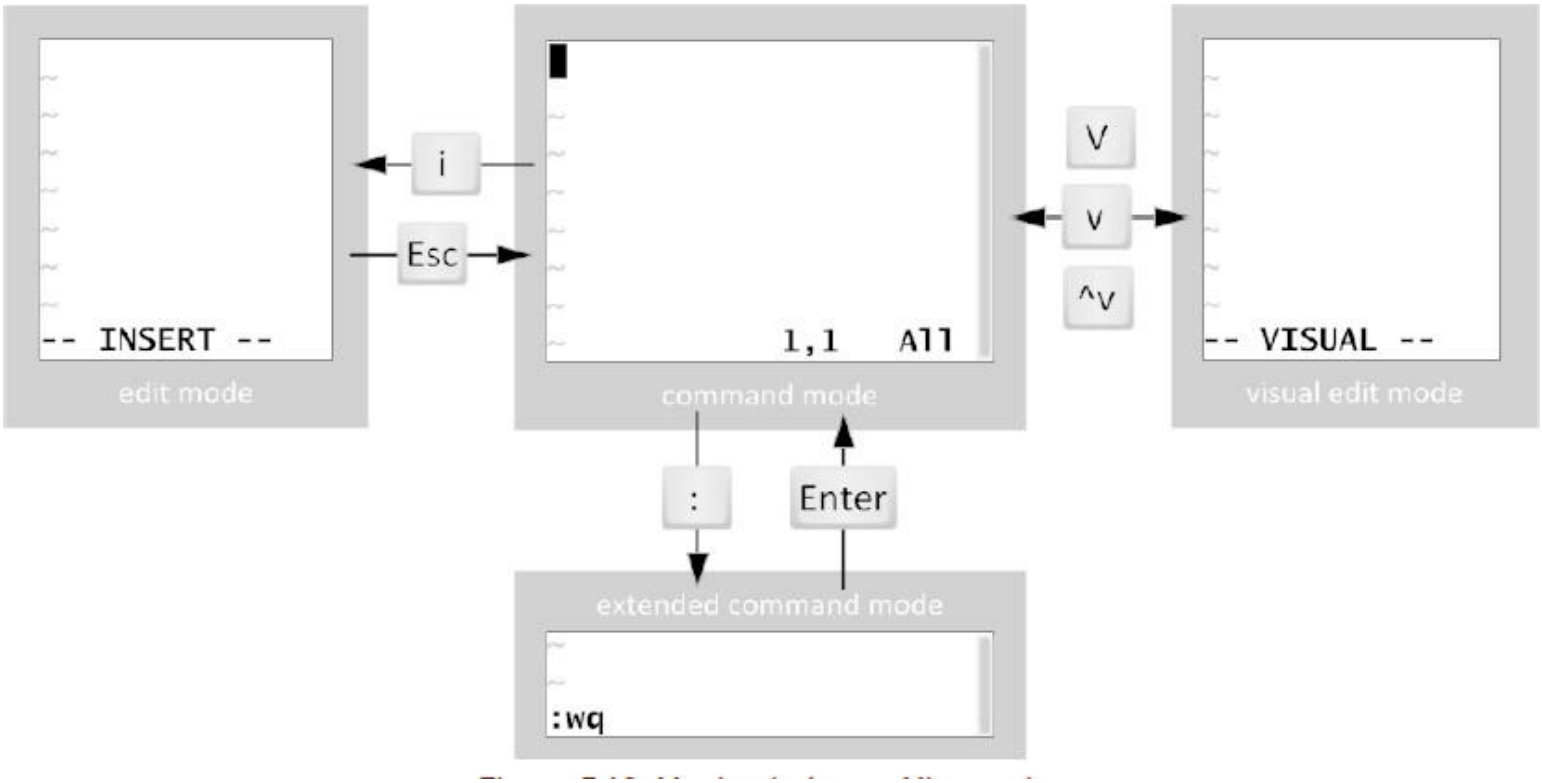

- When you first open **Vim**, it starts in *command mode*, which is used for navigation, cut and paste, and other text manipulation.
- An **i** keystroke enters *insert mode*, where all text typed becomes file content. Pressing **Esc** returns to command mode.

- Visual mode is a great way to highlight and manipulate text.There are three keystrokes:
  - Character mode: v
  - Line mode: Shift+V
  - Block mode: Ctrl+V

Insert Mode

i	puts Vim into insert mode. All text entered after this is treated as file contents until you exit insert mode.
Esc	exits insert mode and returns Vim to command mode.
u	undo the most recent edit.
x	delete a single character
:w	writes(saves) the file and remains in command mode for more editing.
:wq	writes (saves) the file and quits Vim.
:q!	quits Vim, discarding all file changes since the last write.

Visual Mode

- Character mode: v
- Line mode: Shift+V
- Block mode: Ctrl+V

- copy and paste is known as *yank and put*, using command charactersY and P

- Begin by positioning the cursor on the first character to be selected, and then enter visual mode. Use the arrow keys to expand the visual selection. When ready, press y to *yank* the selection into memory. Position the cursor at the new location, and then press p to *put* the selection at the cursor.

Viewing Regular Files' content

- In Linux, in order to view the content of a regular file, we can use:
- The « cat» command: dispalys the full content of a file,
- The « head» command: displays the beginning of a file,
- The « tail» command: display the end of a file,
- ……

More commands on regular files

Command	Description
wc	counts lines, words, and characters in a file
mv	To move ore to rename a file
cp	To copy a file
rm	To remove a file